DRAWING No.

SHEET OF

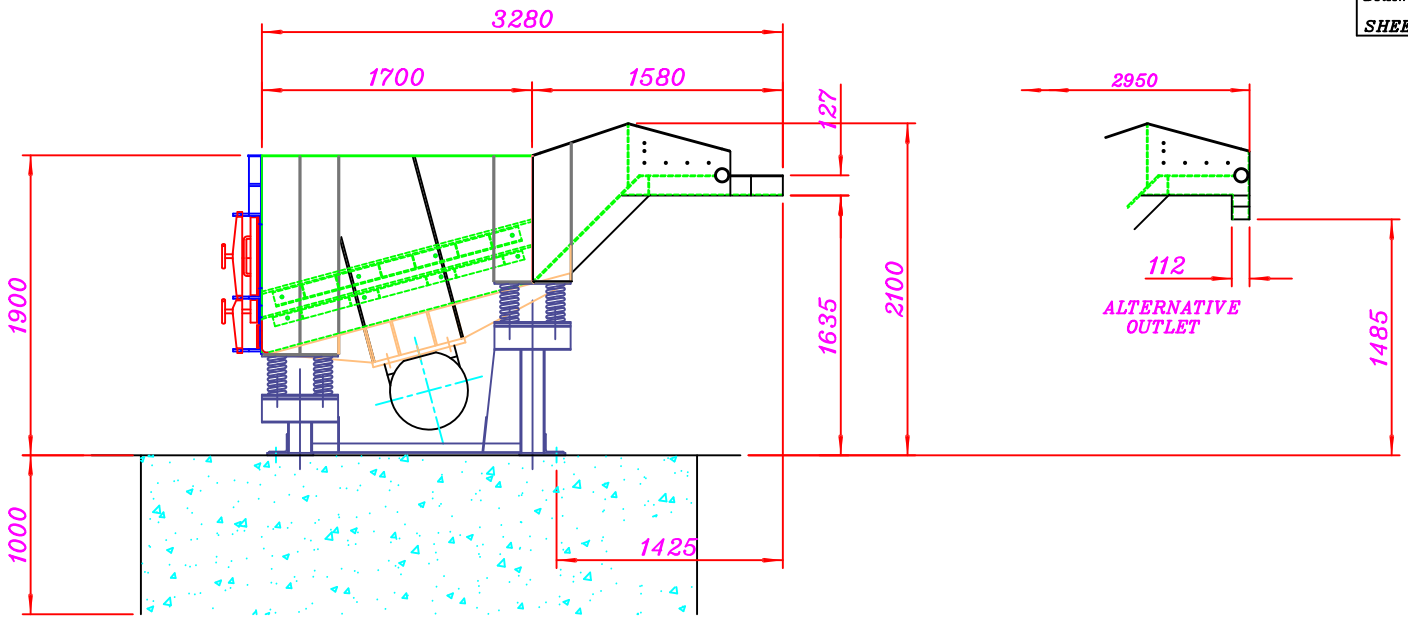

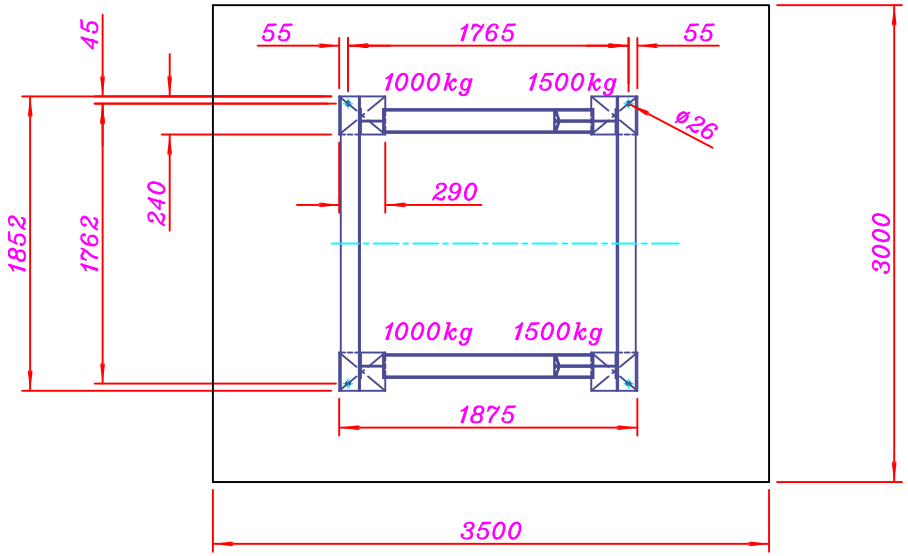

REV	MODIFICATION	APPD.	DATE

FOUNDRY MACHINERY AND SPARES LTD

UNIT H
FRYERS CLOSE,
BLOXWICH, WALSALL,
WEST MIDLANDS.
WS3 2XQ

TEL: (01922) 493603
FAX: (01922) 713729

TITLE

Installation Drawing of ED15 Attrition Unit

CLIENT

ITEM No.	QTY.	DESCRIPTION
DRAWN		DRAWING No. ED15-0001
DATE		
TRACED		
DATE		
CHECKED		
SCALE		SHEET OF

REV.