DRAWING No.

SHEET OF

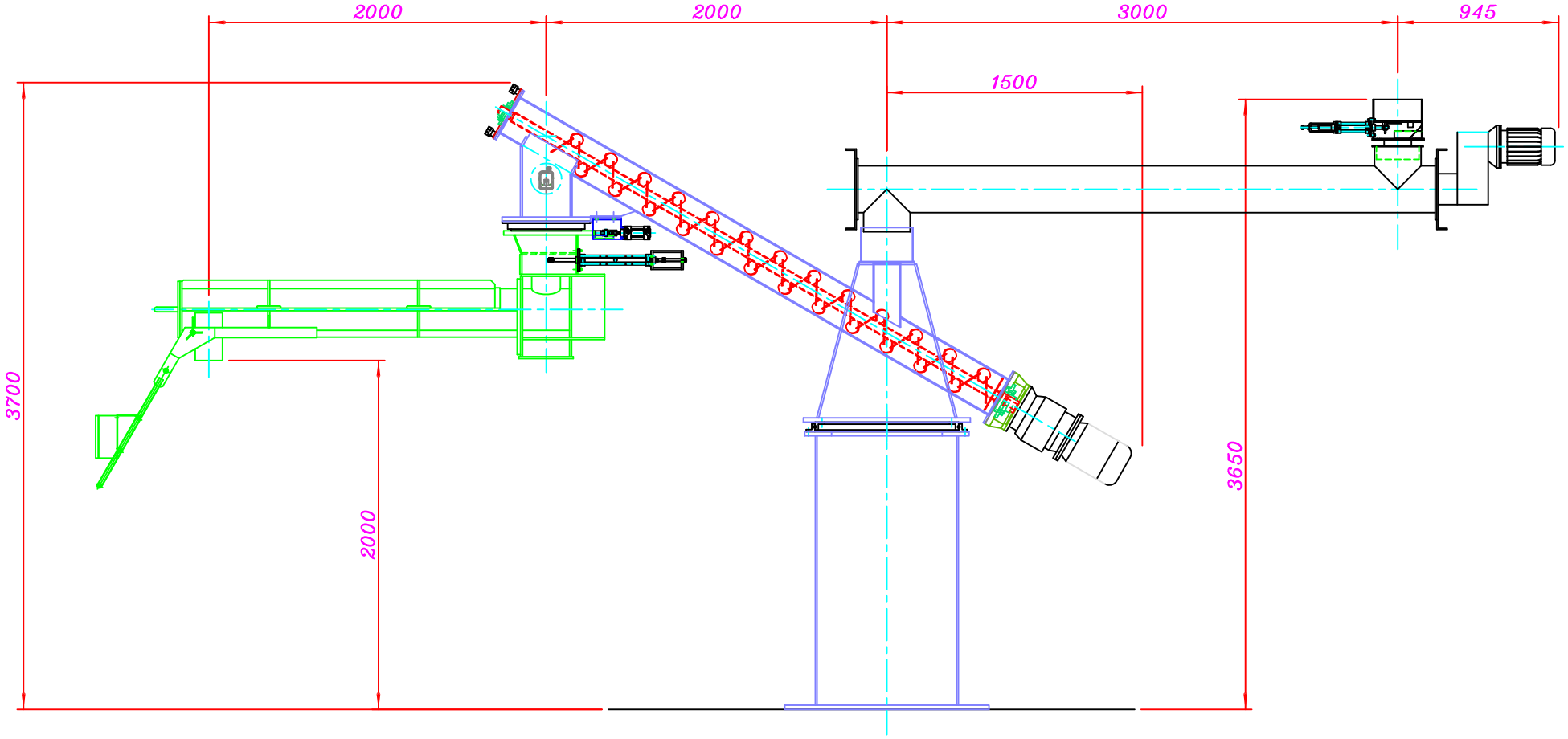

1 MIXER REQUIRED

REV	MODIFICATION	APPD.	DATE

FOUNDRY MACHINERY AND SPARES LTD

UNIT H
FRYERS CLOSE,
BLOXWICH, WALSALL,
WEST MIDLANDS.
WS3 2XQ

TEL: (01922) 493603
FAX: (01922) 713729

TITLE

TA30SC MIXER (ITEM 9)
(2000/2000)

CLIENT

ITEM No.	QTY.	DESCRIPTION
DRAWN		DRAWING No. / REV.
DATE		
TRACED		FMS1465/9 / A
DATE		
CHECKED		
SCALE		SHEET 1 OF