DRG. No.

SHEET OF

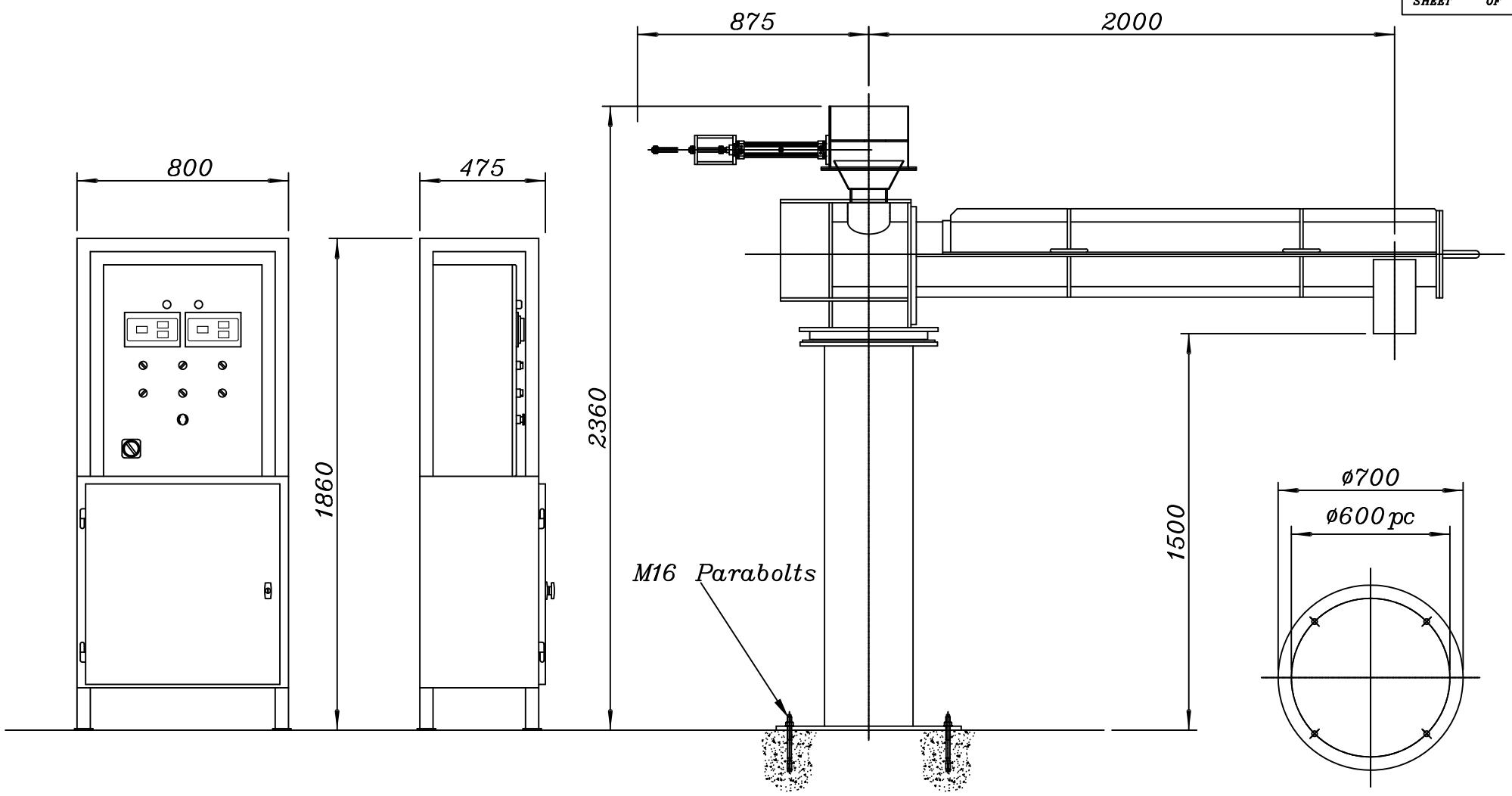


| REV. | MODIFICATION | APPD. | DATE |
|---|---|---|---|
| | | | |


FOUNDRY MACHINERY AND SPARES LTD

UNIT H
FRYERS CLOSE,
BLOXWICH, WALSALL,
WEST MIDLANDS.
WS3 2XQ

TEL: (01922) 493603
FAX: (01922) 713729


TITLE

TS20 INSTALLATION c/w MULTIPLE HEADER BOX

CLIENT

| ITEM No. | DESCRIPTION. | MATL | QTY. |
|---|---|---|---|
| DRAWN | DRAWING NO. | REV. | |
| DATE | | | |
| CHECKED | | | |
| SCALE | SHEET OF | | |


© THIS DRAWING IS THE PROPERTY OF FOUNDRY MACHINERY AND SPARES LTD & MAY NOT BE COPIED, REPRODUCED OR DISCLOSED TO ANY THIRD PARTY WITHOUT WRITTEN PERMISSION.


M102366