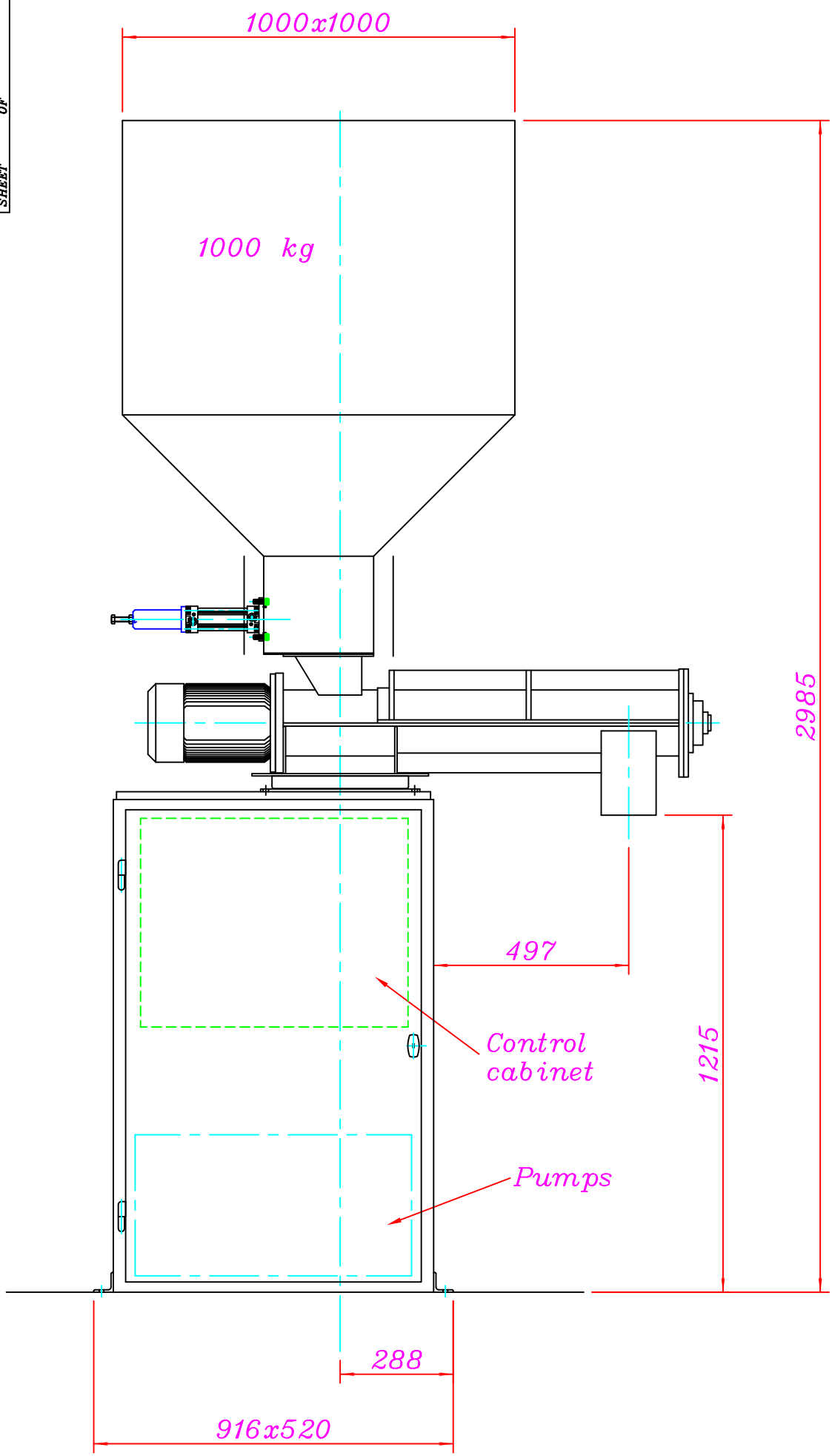

DRAWING No.

SHEET OF

ITEM No.	QTY.	DESCRIPTION	REV.

DRAWN
DATE
TRACED
DATE
CHECKED
SCALE

DRAWING No.

SHEET OF

TITLE

CLIENT

FOUNDRY MACHINERY AND SPARES LTD

UNIT H
FRYERS CLOSE
BLOXWICH, WALSALL,
WEST MIDLANDS.
WS3 2XQ
TEL: (01922) 493603
FAX: (01922) 713729

REV	MODIFICATION	APPD.	DATE