DRG. No.

SHEET OF

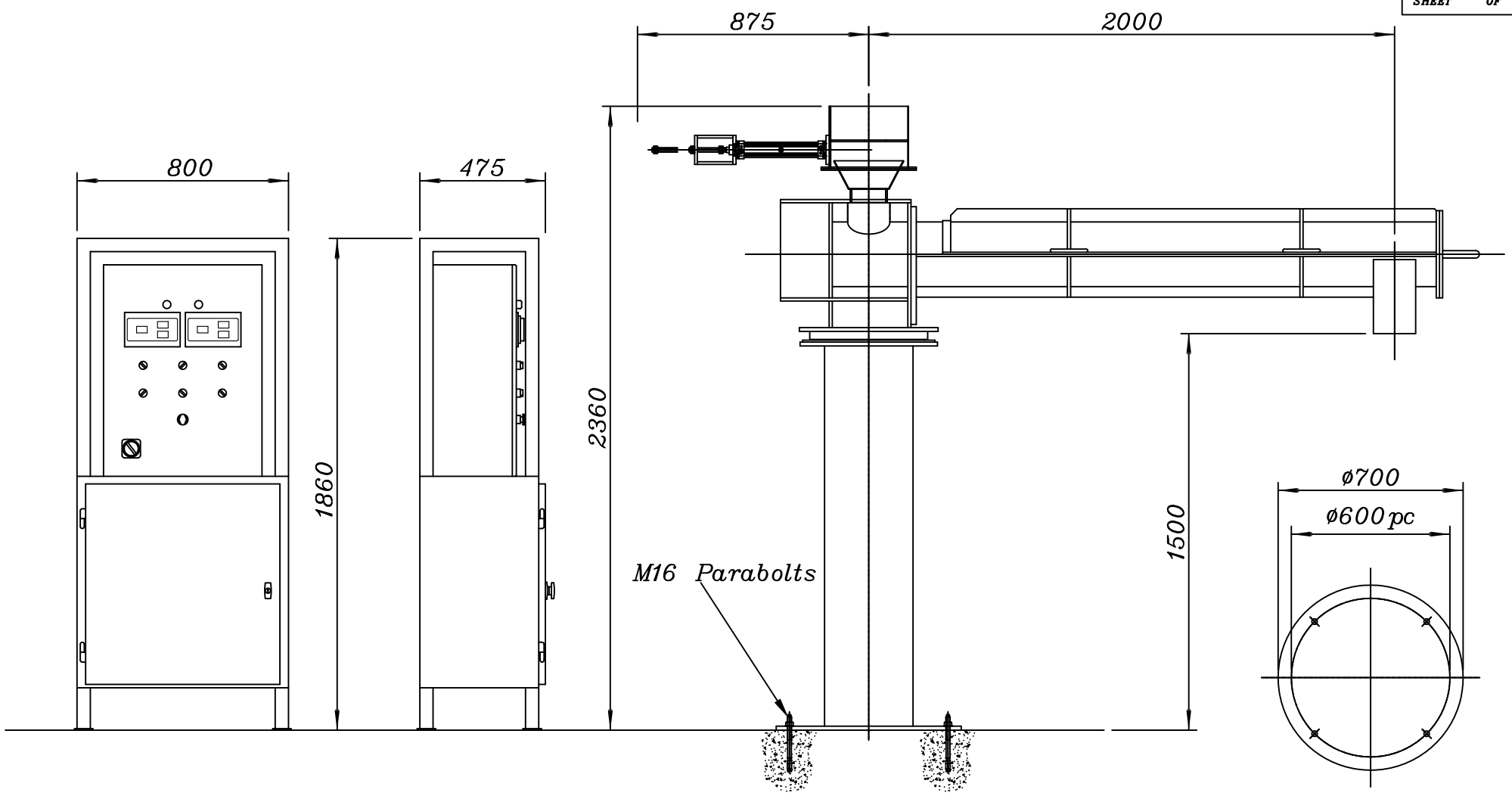

REV.	MODIFICATION	APPD.	DATE

FOUNDRY MACHINERY AND SPARES LTD

UNIT H
FRYERS CLOSE,
BLOXWICH, WALSALL,
WEST MIDLANDS.
WS3 2XQ

TEL: (01922) 493603
FAX: (01922) 713729

TITLE

TS30 INSTALLATION c/w MULTIPLE HEADER BOX

CLIENT

ITEM No.	DESCRIPTION.	MATL	QTY.
DRAWN	DRAWING NO.	REV.	
DATE			
CHECKED			
SCALE	SHEET OF		

© THIS DRAWING IS THE PROPERTY OF FOUNDRY MACHINERY AND SPARES LTD & MAY NOT BE COPIED, REPRODUCED OR DISCLOSED TO ANY THIRD PARTY WITHOUT WRITTEN PERMISSION.

M102366